Product Specification Sheet

Part Type : **LED driver**

Description : **50W-1200mA Constant Current**

42W-1000mA Constant Current

36W-850mA Constant Current

0-10V Dimmable+DIP Switch

Part Number : **SIL50-I1200 120-277 W D1+D3 R(1200 1000 850)(-40℃)(-d)**

1. Input Requirement

1.1 Input Voltage

The nominal input voltage is 120-277VAC
Operating Range: 108-305VAC

1.2 Frequency

The nominal input frequency is 50Hz/60Hz

1.3 Current

The maximum input current is 0.51 Amp at 120Vac at max output load of 50W.

1.4 Efficiency

When the maximum load current is 1200mA, the efficiency of 120V is 84%,The 277V efficiency is 85%
When the maximum load current is 1000mA, the efficiency of 120V is 84%,The 277V efficiency is 85%
When the maximum load current is 850mA, the efficiency of 120V is 84%,The 277V efficiency is 85%

1.5 Power Factor

@ 277VAC, >0.90
@ 120VAC, >0.98

1.6 Inrush Current

120VAC @ 25 DEG C: <50Amp peak

1.7 THD

THD: < 20% @ 25oC 108-305VAC, full load (w/o Dimmer)

2. Output Requirements

2.1 Output Current Setting

Set nominal current at this voltage.

Output	Voltage	Current	Tolerance
50W	Max 41VDC	1200mA	+/- 5%
41W	Max 41VDC	1000mA	+/- 5%
35W	Max 41VDC	850mA	+/- 5%

2.2 Output Voltage Range

Driver must work at these voltages.

Output	Voltage	Current	Tolerance
50W	26-41VDC	1200mA	+/- 5%
41W	26-41VDC	1000mA	+/- 5%
35W	26-41VDC	850mA	+/- 5%

2.3 Output Line Regulation

With output clamped to below set points, vary input from 108-305VAC.

Output	Voltage Set Point	Current range
50W	41VDC	1140-1260mA
41W	41VDC	950-1050mA
35W	41VDC	807-893mA

2.4 Current Stability

+/- 3% maximum after 8 hours

2.5 Ripple Factor

Measured at max rated load and electronic load connecting to the output is see as below : Vd=41V Rd=0.1

Ripple factor<8% (Ipk-pk/2/Imean).

2.6 No Load Voltage

Not to exceed 60VDC.

2.7 Turn on Delay

Measured @ 120VAC max rated load: < 0.75 seconds.

3. Protection Requirement

3.1 Short circuit protection:

When operating under any line condition into a short circuit condition for an indefinite period of time, the power supply shall be self recovering when fault condition is removed.

3.2 Over-current protection:

When operating under any line condition into any over load condition for an indefinite period of time, the power supply shall be self recovering when fault condition is removed.

4. Environmental Conditions

4.1 Operating

The power supply shall be capable of operating continuously in any mode without performance deterioration in the following environmental conditions:

4.11 Ambient Temperature:

-40 to 55 Deg C. 100% rated power at 55 Deg C.

4.12 Class P

4.13 Relative Humidity:

5 to 95%, non-condensing

4.14 Cooling:

Convection

4.2 Non-Operating

The power supply shall be capable of standing the following environmental conditions extended periods of time, without sustaining electrical or mechanical damage and subsequent operational deficiencies.

4.2.1 Ambient Temperature:

-40 to 85 Deg C.

4.3 Shock & Vibration:

MIL-STD-810G Shock Method 516.6 procedure IV and Vibration Method 514.6 Procedure I, Category 4

5. Reliability

5.1 MTBF

>300,000hrs calculated to MIL-HDBK217F @ 25 DEG C. rated load. Ground Benign.

5.2 Product Life

>50000hrs @ tc=90C. ambient, rated load.

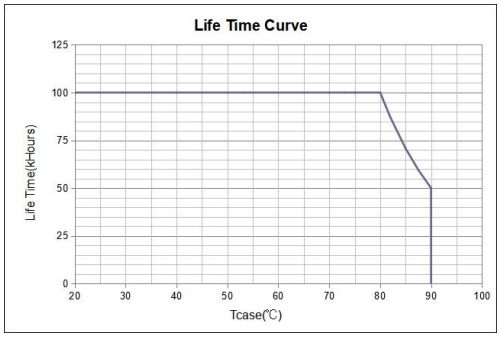

6. EMC

6.1 Conducted&Radiate

FCC Part 15 Class B

6.2 Audible Noise:

Class A sound rating not to exceed 24dBA (audible) when installed in fixture and such fixture is installed in its normal use. The measurement is to be made from a distance not less than 3 feet.

6.3 ESD:

IEC 61000-4-2 Level 2: 2KV Air and Contact.

6.4 Input Transient Protection

Power supply shall comply with IEEE C.62.41-1991, Class A operation. The line transient shall consist of seven strikes of a 100 kHz ring wave, 2.5 kV level for both common mode and differential mode.

7. Safety

7.1 Agency Approvals

UL 8750-LED equipment for use in lighting product
UL1310-CLASS 2 Power units
CSA C22.2 No. 250.13-12-LED equipment for lighting applications

8.Dimmable

8.1 0-10V Dimming

0-10V Input Signal:0-10V
Dimming Range:10-100%

9. Mechanical

9.1 Materials

Metal case

All material to be ROHs compliant to Directive （EU）2015/863

Wires to be Stranded with UL approval

Input: Black & White : 250mm , 18AWG 105℃ 600V

Output: Red & Blue : 600mm , 20AWG 105℃ 600V
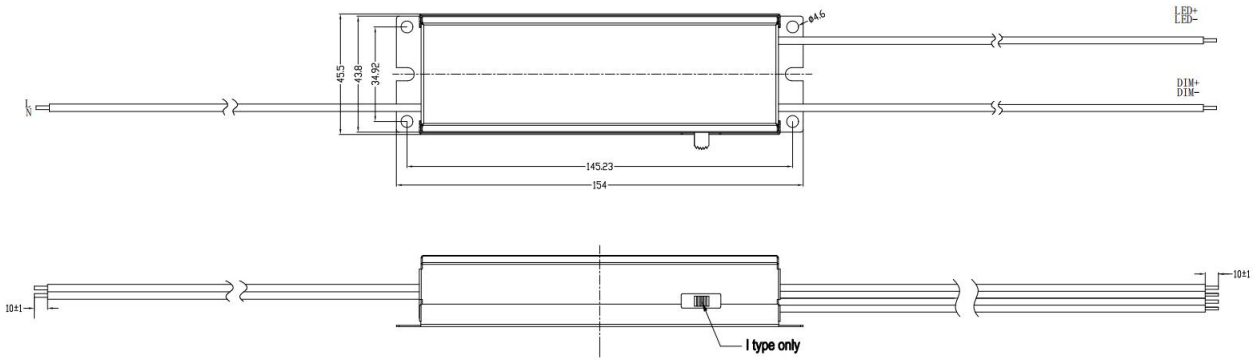
Dimming: Purple & Pink : 470mm , 18AWG 105℃ 600V